NOTES: (UNLESS OTHERWISE SPECIFIED)

1. ALL ITEMS NOT EXPLICITLY DEFINED IN THIS DRAWING ARE DEFINED BY THE MASTER CAD MODELS. ALL DIMENSIONS NOT DEFINED ON THIS DRAWING ARE CONTAINED WITHIN THE FOLLOWING MANUFACTURING FILES:
   - 1.1. FLAT PARTS: <MATERIAL>_<MATERIAL COLOR, IF APPLICABLE>_<THICKNESS, IN DECIMAL INCHES>_<PN>_<DESCRIPTION>_<REV>_V<VERSION NUMBER OF MODEL>.SVG
   - 1.2. FDM 3D PRINTED PARTS: FDM_<PN>_<DESCRIPTION>_<REV>_V<VERSION # OF MODEL>.3MF
   - 1.3. MACHINED OR BENT PARTS: <PN>_<DESCRIPTION>_<REV>_V<VERSION # OF MODEL>.STEP
2. FINISH ALL MANUFACTURED PARTS IAW FED-STD-595, FS36231, DULL GULL GREY.
3. ALL FDM PRINTED PARTS ARE PRINTED TO MAXIMUM MATERIAL CONDITION. REMOVAL OF .02 MAX MATERIAL ON MDF INTERFACING SURFACES IS ALLOWED.

REVISION HISTORY

REV	DESCRIPTION	DATE	APPROVED
-	INITIAL RELEASE	5/13/2023	
A	OH4A1A1-17 - ADDED MISSING #6-32 INSERT, REMOVED #6-32 INSERT	4/26/2026	

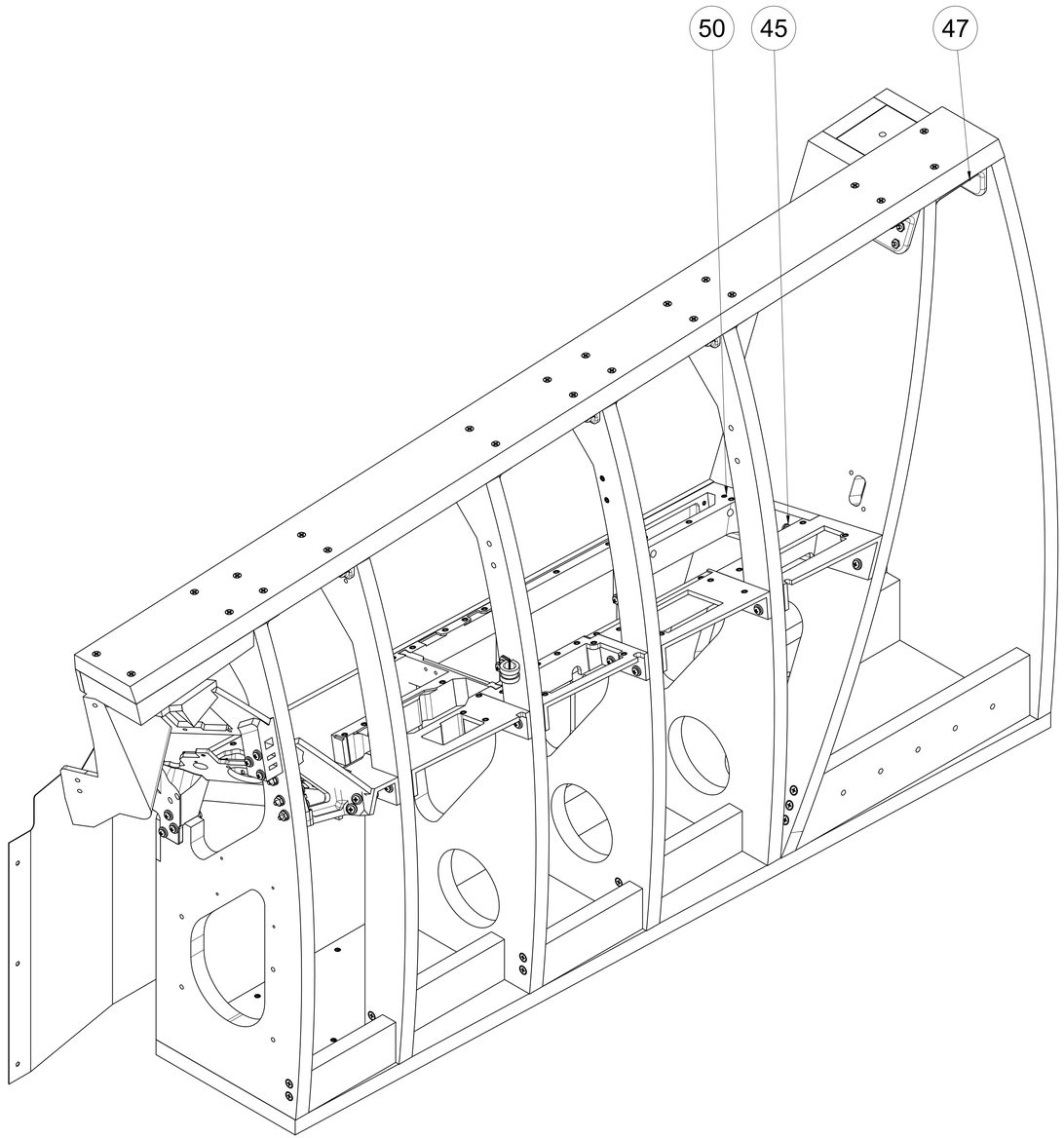

-1 ASSY

ITEM	QTY	PART NUMBER	DESCRIPTION	MATERIAL
54	1	90272A190	PHS, #8-32 X 0.250, STEEL	STL
53	1	3225T24	VIBRATION-DAMPING LOOP CLAMP	----
52	3	91249A151	PHS, #6-32 X .625, 18-8, BLK	SS
51	4	93365A120	INSERT, 4-40, BRASS, FOR PLASTICS	BRS
50	13	93365A130	INSERT, 6-32, BRASS, FOR PLASTIC	BRS
49	66	93365A140	INSERT, 8-32, BRASS, FOR PLASTICS	BRS
48	5	91249A192	PHS, #8-32 X .375, 18-8, BLK	SS
47	79	91841A009	NUT, #8-32, 18-8	SS
46	48	90272A203	PHS, #8-32 X 1.50, STEEL	STL
45	70	98023A113	WASHER, #8, STEEL, ZINC	STL
44	36	92105A660	INSERT, 8-32, SELF TAPPING, FOR SOFTWOOD	ZINC
43	32	90471A436	FHS, 100DEG, #8-32 X 1.25, STEEL	STL
42	29	90471A435	FHS, 100DEG, #8-32 X .625, STEEL	STL
41	75	90252A115	FHWS, 82DEG, #8 X 1.50, STEEL, BLK, FOR MDF	STL
40	1	OH4A1A1-49	LEFT AUX SUPPORT BRACKET, LOWER, INBOARD	PETG
39	1	OH4A1A1-48	LEFT AUX SUPPORT BRACKET, LOWER, OUTBOARD	PETG
38	1	OH4A1A1-47	LEFT AUX SUPPORT BRACKET, FWD, OUTBOARD	PETG
37	1	OH4A1A1-46	LEFT AUX UPPER BRACKET	PETG
36	1	OH4A1A1-45	LEFT AUX PANEL	ACRL
35	1	OH4A1A1-44	LEFT AUX VENT PLUG	PETG
34	1	OH4A1A1-43	INBOARD FWD LEFT CONSOLE TRIM	ALU
33	2	OH4A1A1-42	AFT BULKHEAD STRINGER	MDF
32	2	OH4A1A1-41	E-F LOWER STRINGER	MDF
31	2	OH4A1A1-40	C-D LOWER STRINGER	MDF
30	1	OH4A1A1-39	B-C LOWER STRINGER	MDF
29	1	OH4A1A1-38	A-B LOWER STRINGER	MDF
28	1	OH4A1A1-37	INBOARD WALL SUPPORT	PETG
27	1	OH4A1A1-36	LEFT CONSOLE INBOARD WALL	MDF
26	1	OH4A1A1-35	LEFT AFT BULKHEAD	MDF
25	1	OH4A1A1-34	LEFT AFT INTERNAL BULKHEAD	MDF
24	1	OH4A1A1-33	LEFT CONSOLE FLOOR	MDF
23	1	OH4A1A1-32	INBOARD LEFT CONSOLE WALL	MDF
22	1	OH4A1A1-31	AFT LEFT UPPER BULKHEAD BRACKET	PETG
21	3	OH4A1A1-30	CONSOLE SILL BRACKET B-L	PETG
20	4	OH4A1A1-29	CONSOLE SILL BRACKET A-L	PETG
19	1	OH4A1A1-28	CANOPY RAIL	MDF
18	1	OH4A1A1-27	AFT LEFT CONSOLE CANOPY RAIL BRACKET	PETG
17	1	OH4A1A1-26	CANOPY RAIL TRIM	MDF
16	1	OH4A1A1-25	FWD LEFT CONSOLE CANOPY RAIL BRACKET	PETG
15	1	OH4A1A1-24	E-AFT LEFT OUTBOARD SPACER	PETG
14	1	OH4A1A1-23	D-E LEFT OUTBOARD SPACER	PETG
13	1	OH4A1A1-22	C-D LEFT OUTBOARD SPACER	PETG
12	1	OH4A1A1-21	B-C LEFT OUTBOARD SPACER	PETG
11	1	OH4A1A1-20	LEFT SUB-CONSOLE RAIL	PETG
10	1	OH4A1A1-19	A-B LEFT OUTBOARD SPACER	PETG
9	1	OH4A1A1-18	LEFT CONSOLE - LEFT AUX SPACER	PETG
8	1	OH4A1A1-17	E-AFT LEFT INBOARD SPACER	PETG
7	1	OH4A1A1-16	E-D LEFT INBOARD SPACER	PETG
6	1	OH4A1A1-15	D-C LEFT INBOARD SPACER	PETG
5	1	OH4A1A1-14	PRIMARY RIB D	MDF
4	1	OH4A1A1-13	PRIMARY RIB C	MDF
3	1	OH4A1A1-12	PRIMARY RIB B	MDF
2	1	OH4A1A1-11	PRIMARY RIB A	MDF
1	1	OH4A1A1-10	PRIMARY RIB E	MDF

PARTS LIST

UNLESS OTHERWISE SPECIFIED:

DIMENSIONS ARE IN INCHES.

DUAL DIMENSIONS ARE IN MILIMETERS AND ENCLOSED IN SQUARE BRACKETS.

INTERPRET DRAWING IAW ASME Y14.100-2017.

INTERPRET DIM AND TOL IAW ASME Y14.5-2009.

REMOVE ALL BURRS AND SHARP EDGES TO .05 MAX.

DIMENSIONS APPLY BEFORE FINISH.

UOS INCH TOLERANCES ARE:

DECIMALS:
.X ± .1
.XX ± .03
.XXX ± .010

ANGLES:
MACHINED ± .5°
LOCATING ± .5°
FORMED ± 2°
CHAMFERS ± 5°

DRILLED HOLE DIAMETERS:
.0135 - .125: +.004/-.001
.126 - .250: +.005/-.001
.251 - .500: +.006/-.001
.501 - .750: +.008/-.001
.751 - 1.000: +.010/-.001
1.001 - 2.000: +.012/-.001

OPEN HORNET
https://www.OpenHornet.com

TITLE
ASSY, LEFT CONSOLE STRUCTURE
LEFT CONSOLE

DESIGNED	J. STEENSEN	05/13/2023
CHECKED		
DRAWN	J. STEENSEN	05/13/2023

CC BY NC SA

SIZE D | DWG NO OH4A1A1-1 | REV A

SCALE 1:3 | DO NOT SCALE DWG | SHEET 1/7

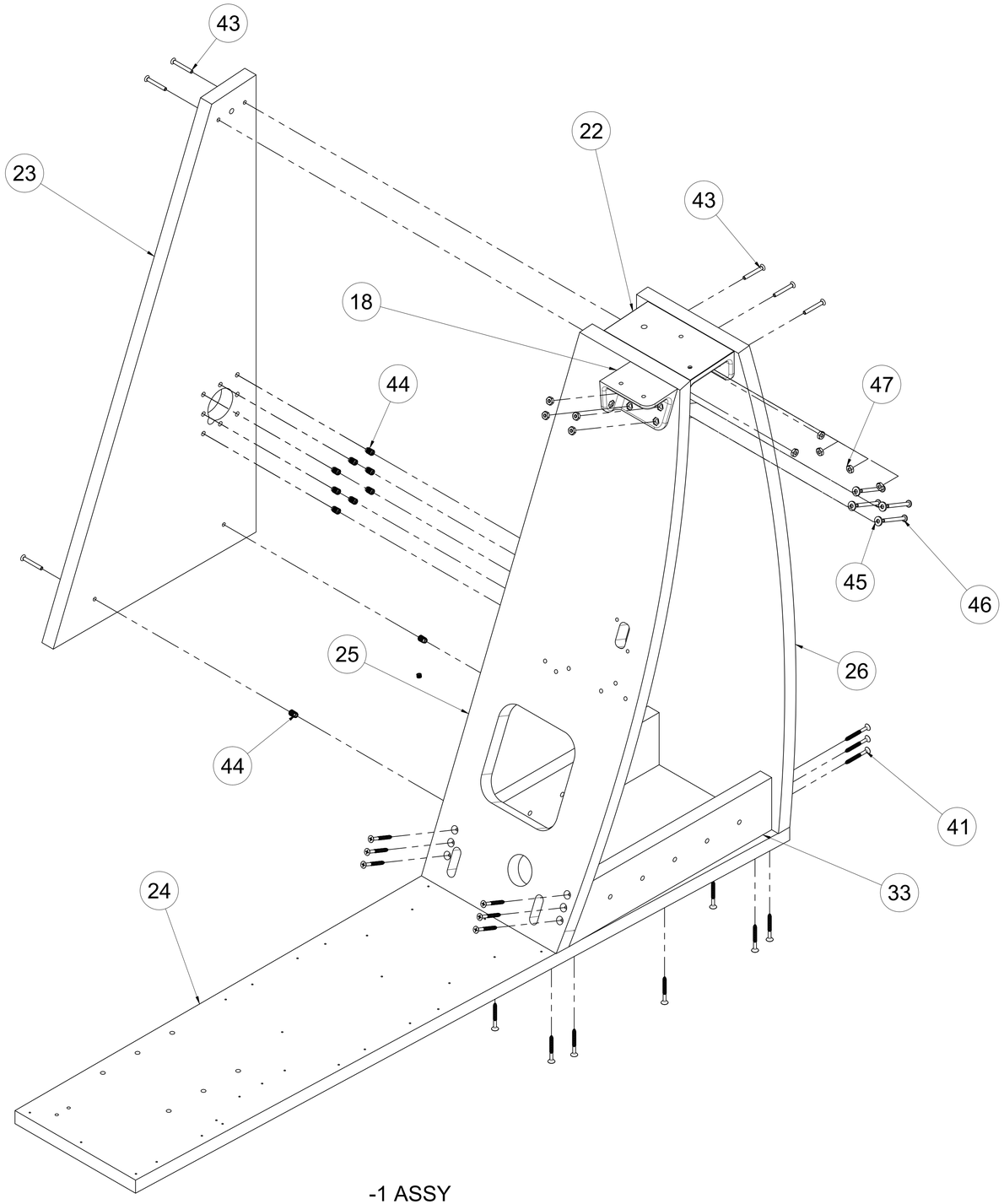

-1 ASSY
BASE STRUCTURE
ASSEMBLY

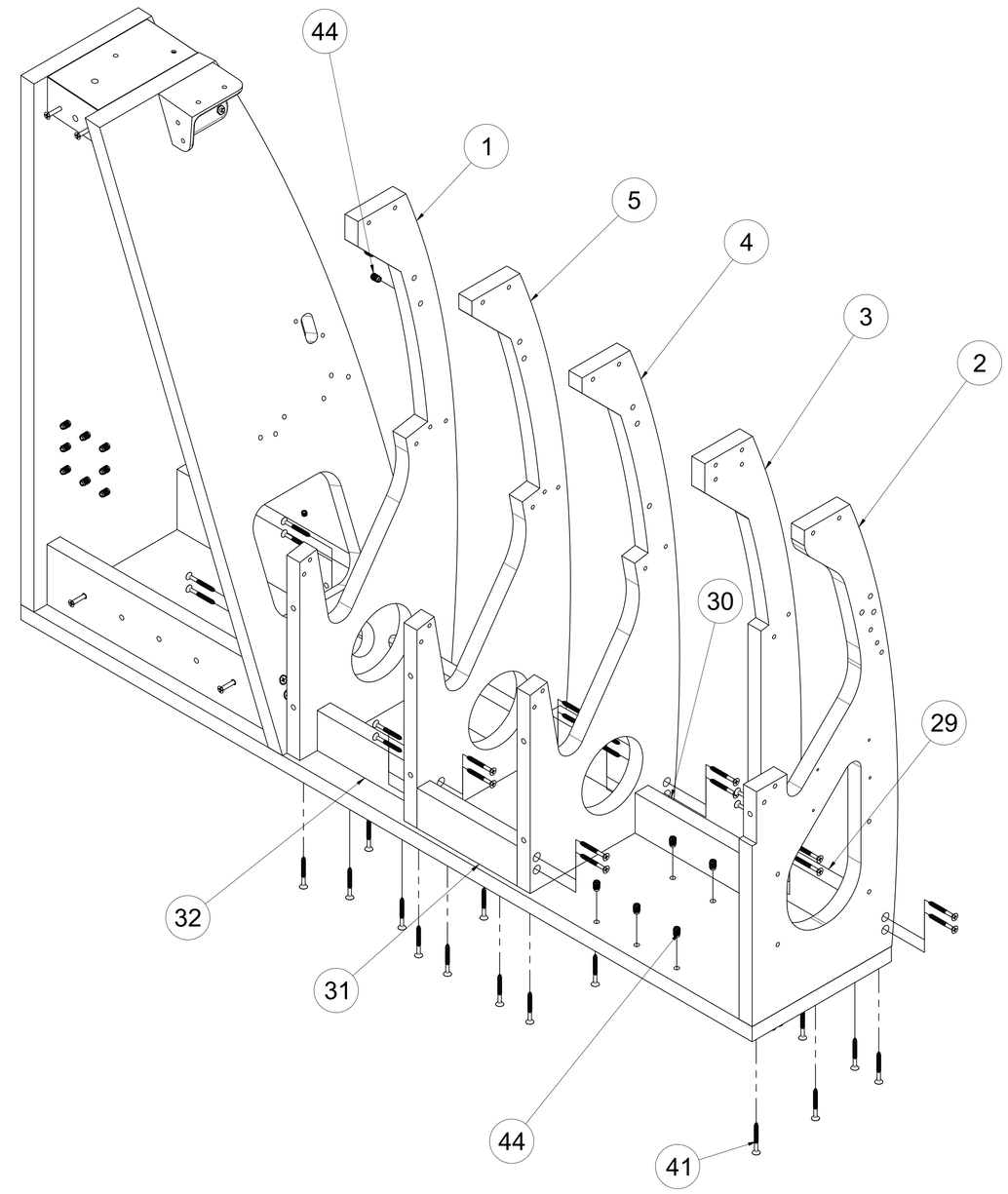

-1 ASSY
RIBS & STRINGER
INSTALLATION

(FN 23 HIDDEN FOR
CLARITY)

BY NC SA

OPEN HORNET
https://www.OpenHornet.com

SIZE	DWG NO	REV
D	OH4A1A1-1	A
SCALE 1:3		SHEET 2/7

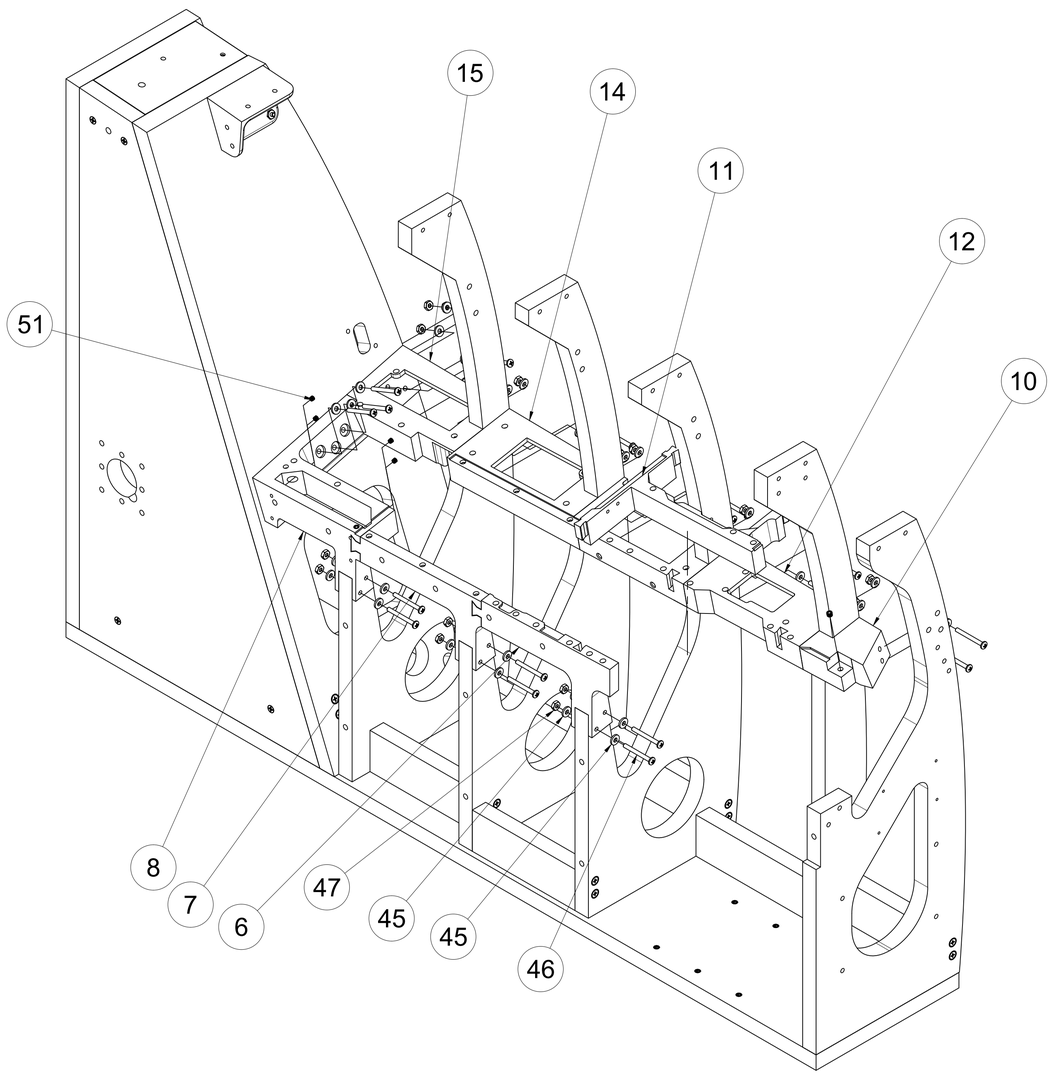

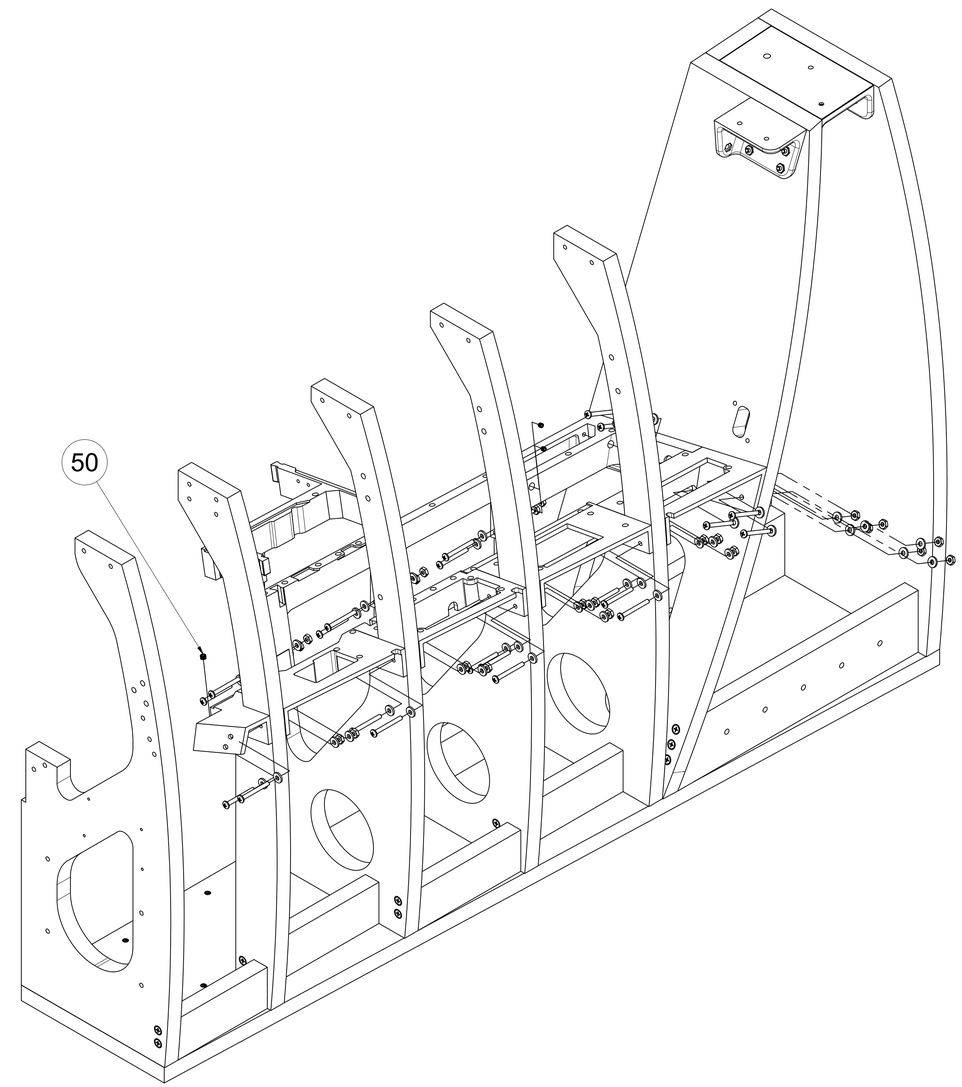

-1 ASSY
CONSOLE FACE
INSTALLATION

OPEN HORNET
https://www.OpenHornet.com

CC BY NC SA

SIZE	DWG NO	REV
D	OH4A1A1-1	A
SCALE 1:3		SHEET 3/7

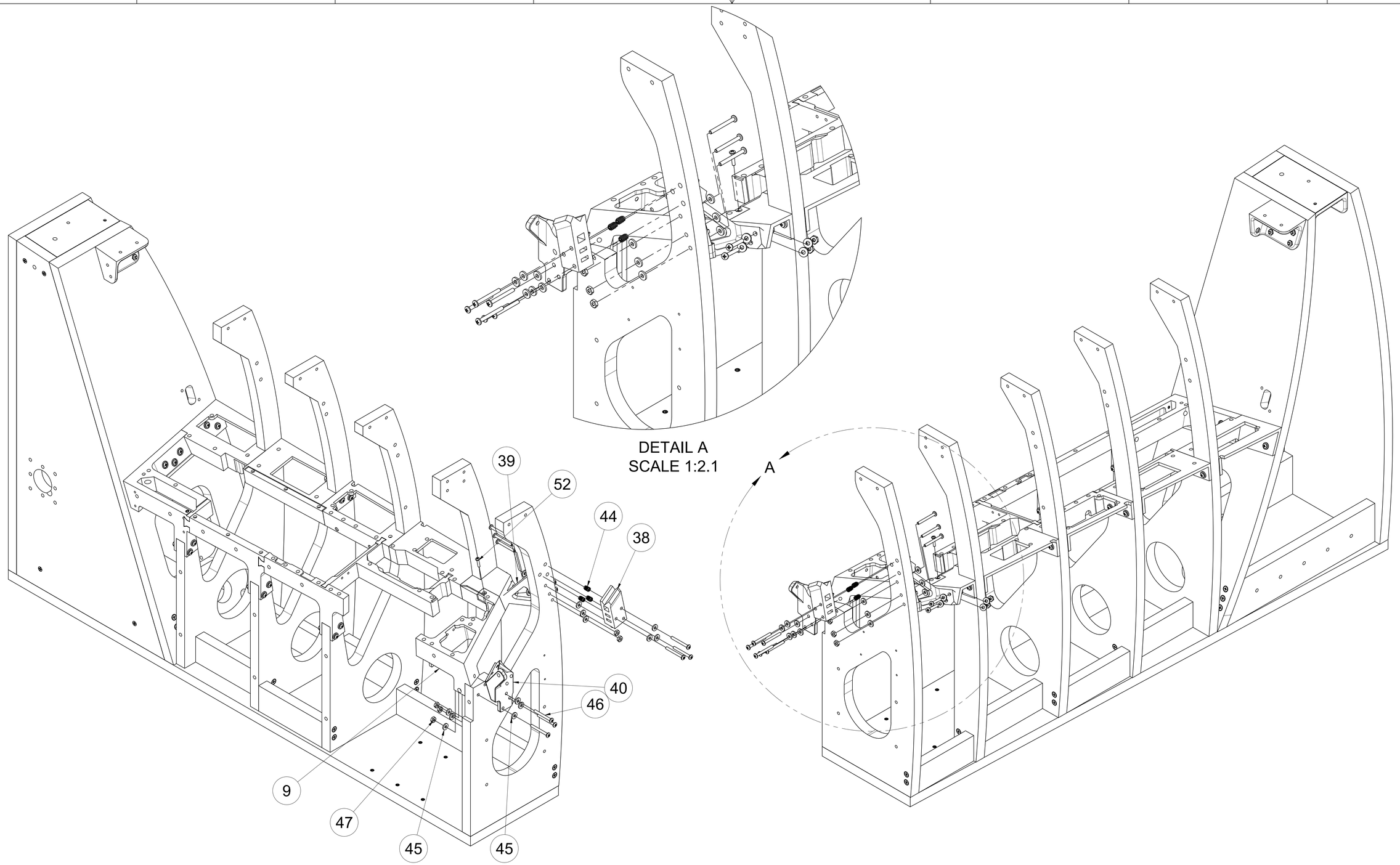

-1 ASSY
FWD CONSOLE
INSTALLATION

CC BY NC SA

OPEN HORNET
https://www.OpenHornet.com

SIZE	DWG NO	REV
D	OH4A1A1-1	A
SCALE 1:3		SHEET 4/7

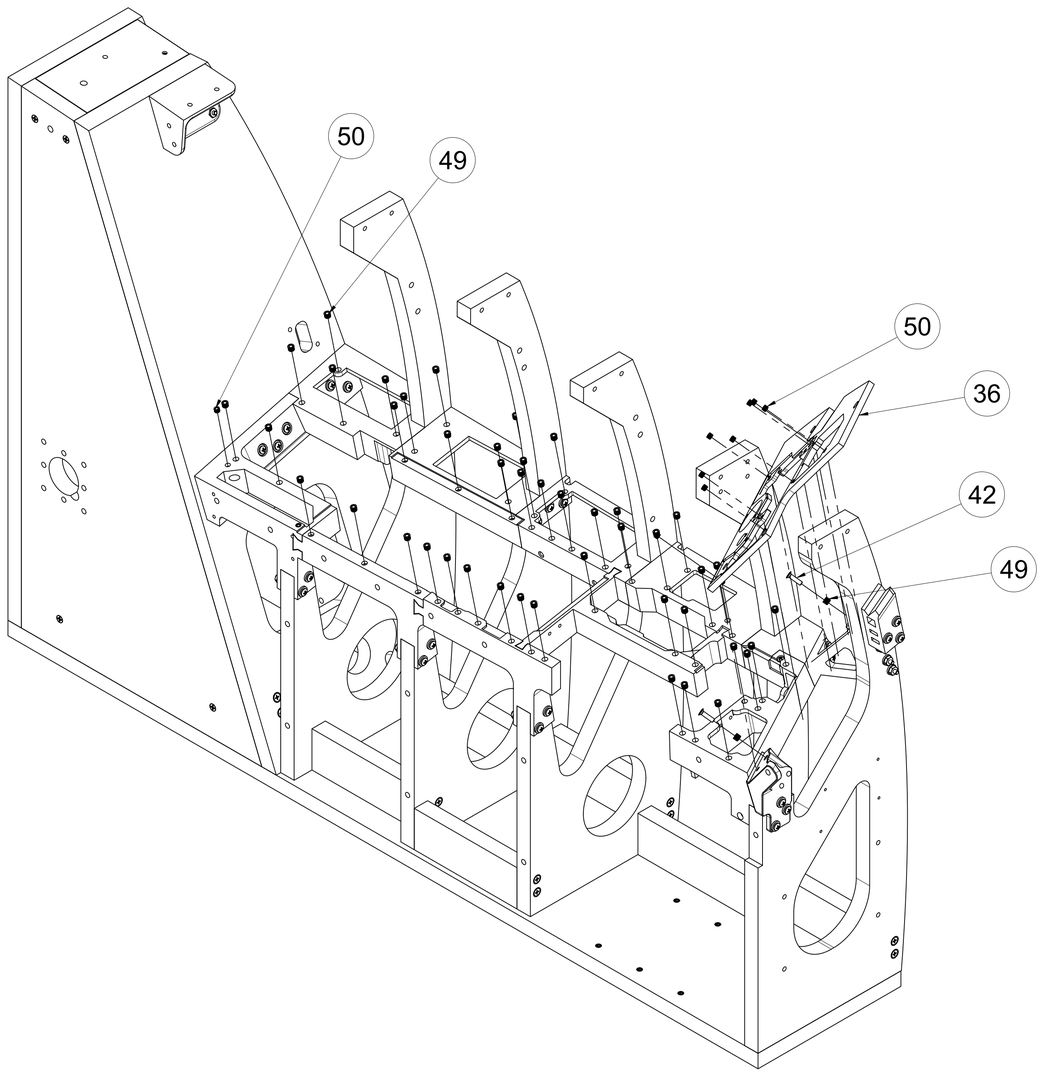

-1 ASSY
AUX CONSOLE FACE &
CONSOLE INSERT
INSTALLATION

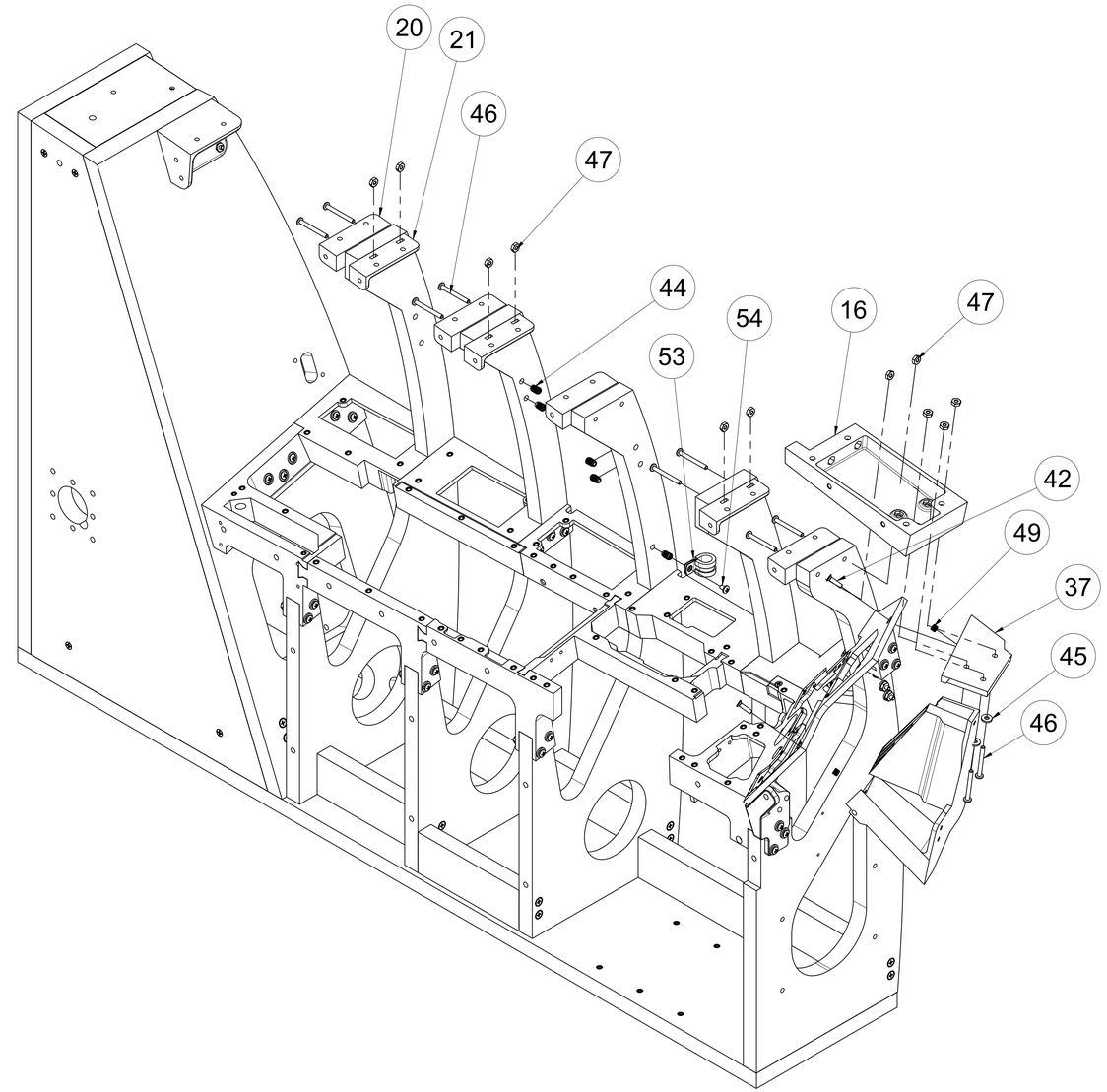

-1 ASSY
UPPER AUX SUPPORT
STRUCTURE, RIB HARDWARE,
& CANOPY RAIL SUPPORT
BRACKET INSTALLATION

BY NC SA

OPEN HORNET
https://www.OpenHornet.com

SIZE	DWG NO	REV
D	OH4A1A1-1	A
SCALE 1:8		SHEET 5/7

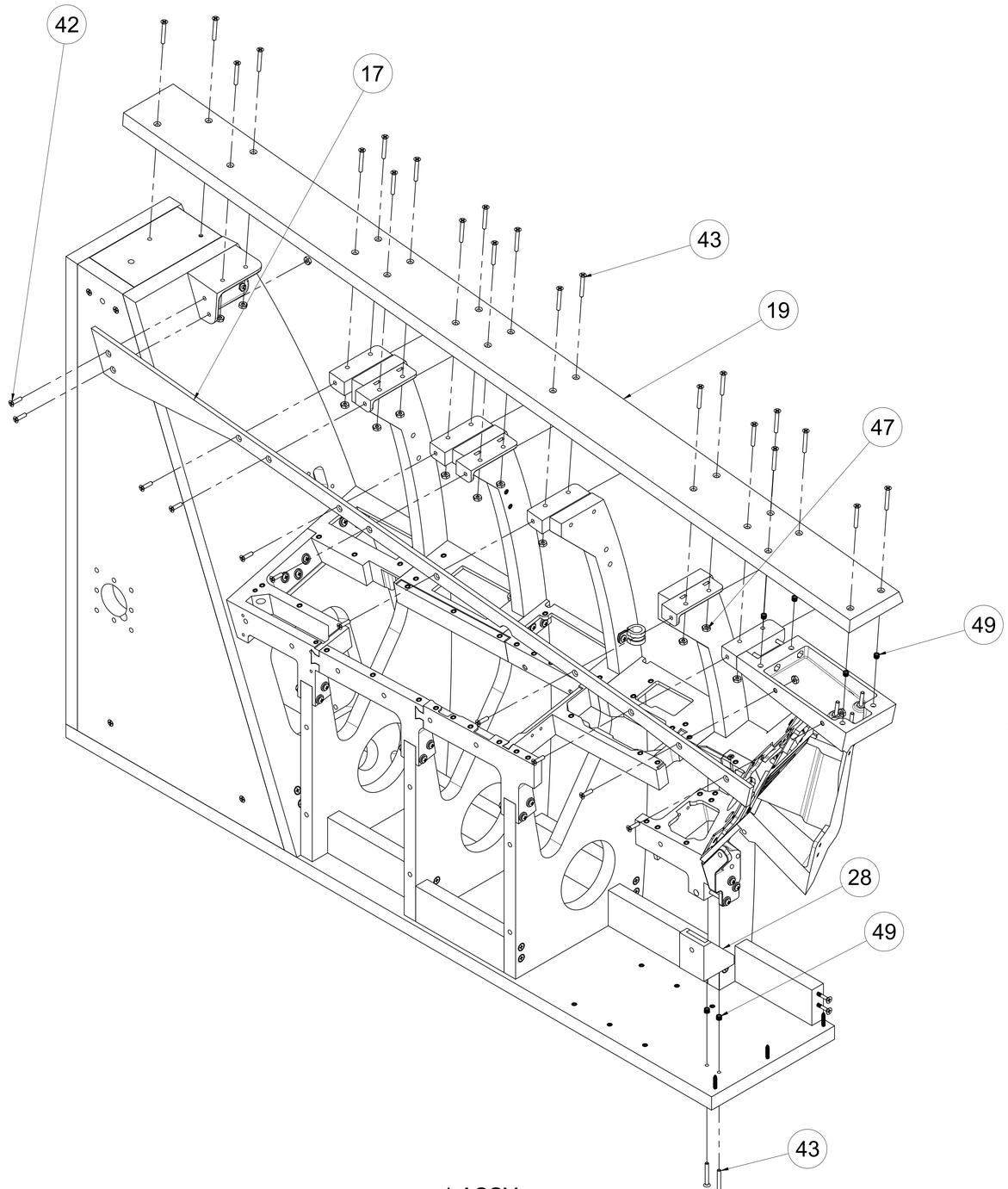

-1 ASSY
CANOPY RAIL & TRIM
INSTALLATION

(FN 2 HIDDEN FOR
CLARITY)

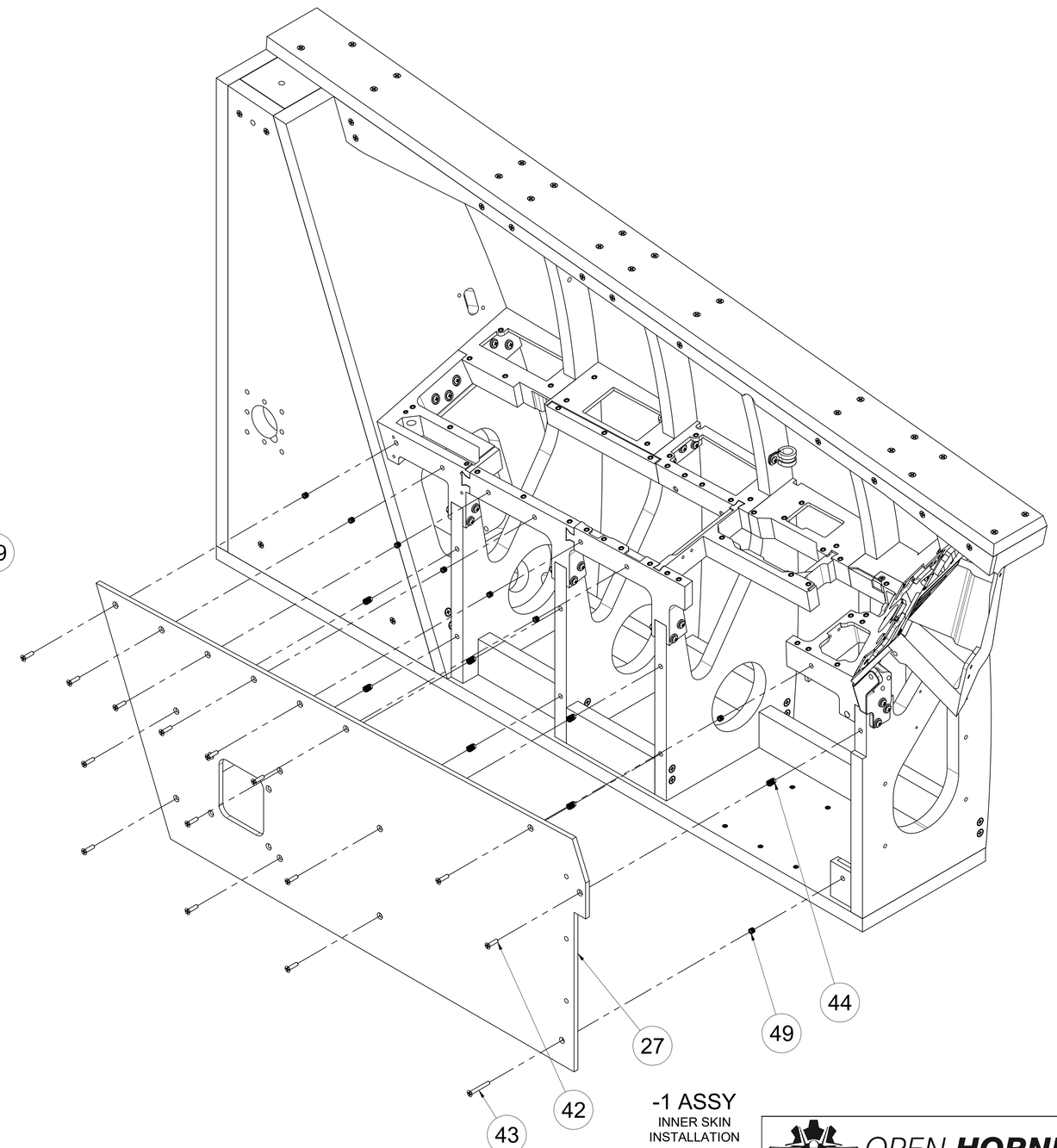

-1 ASSY
INNER SKIN
INSTALLATION

BY NC SA

OPEN HORNET
https://www.OpenHornet.com

SIZE	DWG NO	REV
D	OH4A1A1-1	A
SCALE 1:8		SHEET 6/7

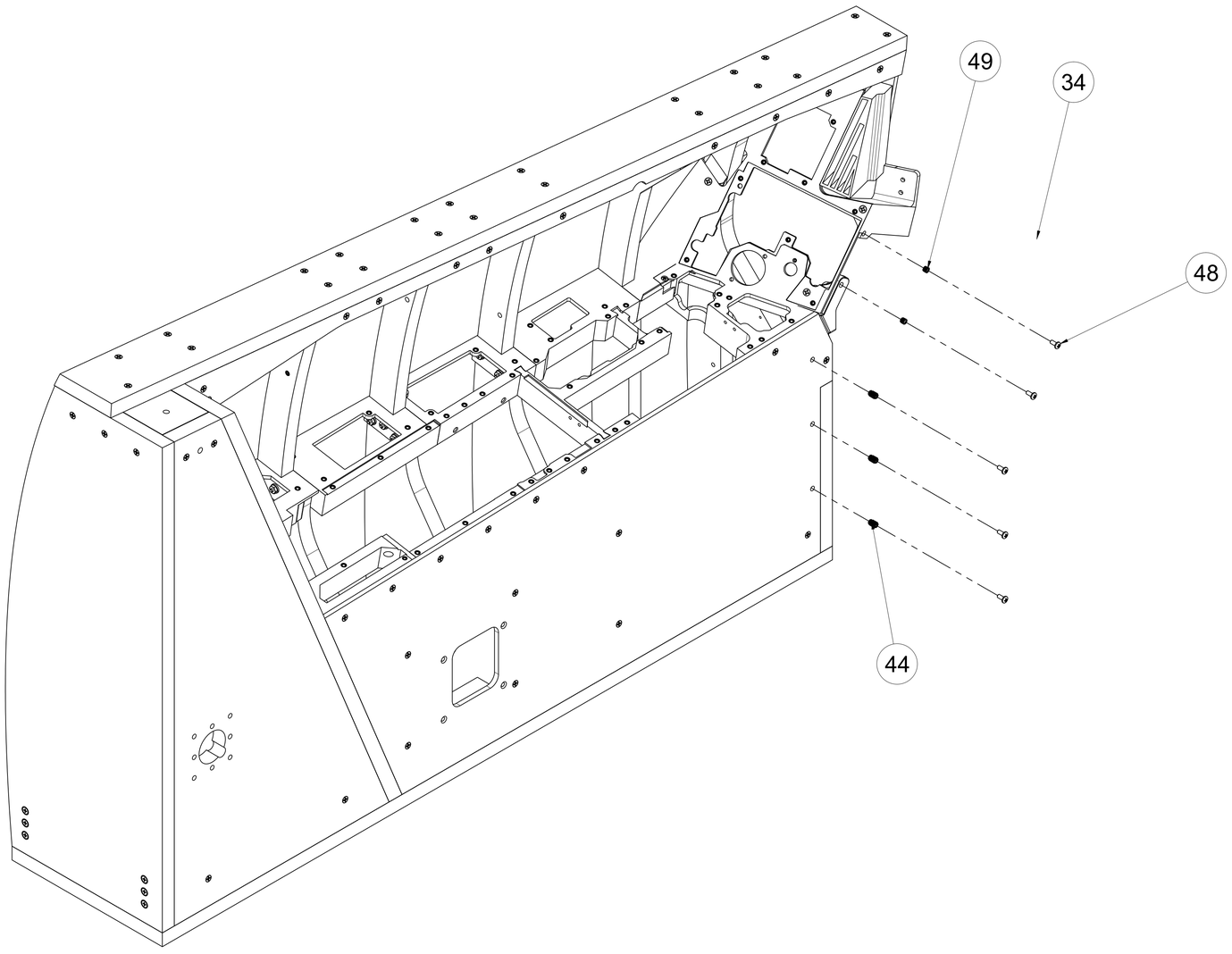

-1 ASSY
FWD INBD SKIN
INSTALLATION

OPEN HORNET
https://www.OpenHornet.com

SIZE	DWG NO	REV
D	OH4A1A1-1	A
SCALE 1:8		SHEET 7/7

CC BY NC SA